ASUS ZB601KL_RF Trouble Shooting Guide

1.RF Areas

The need to calibrate the range is as follows: “phone2G/3G/4G”、“MCP”

BOT SIDE

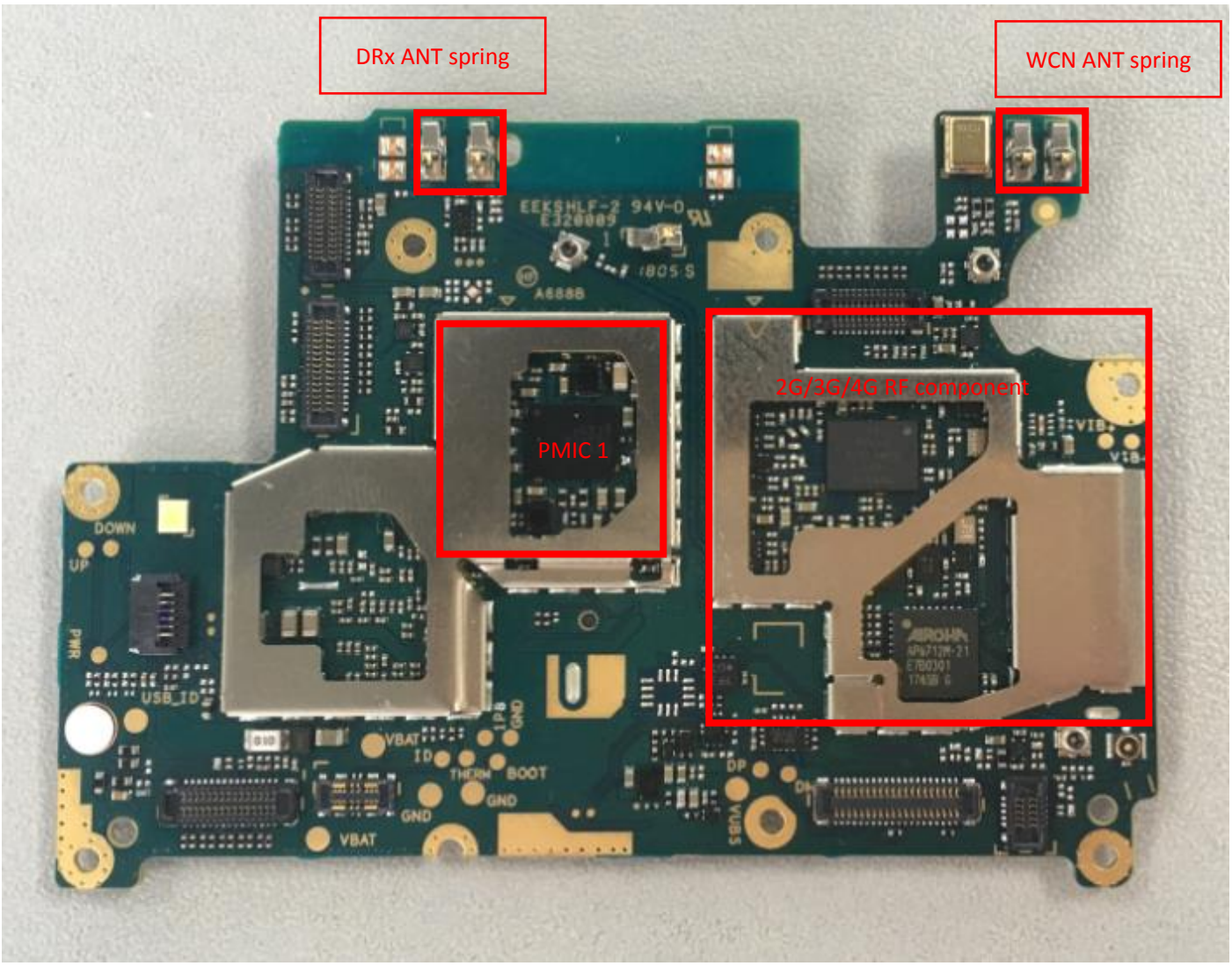

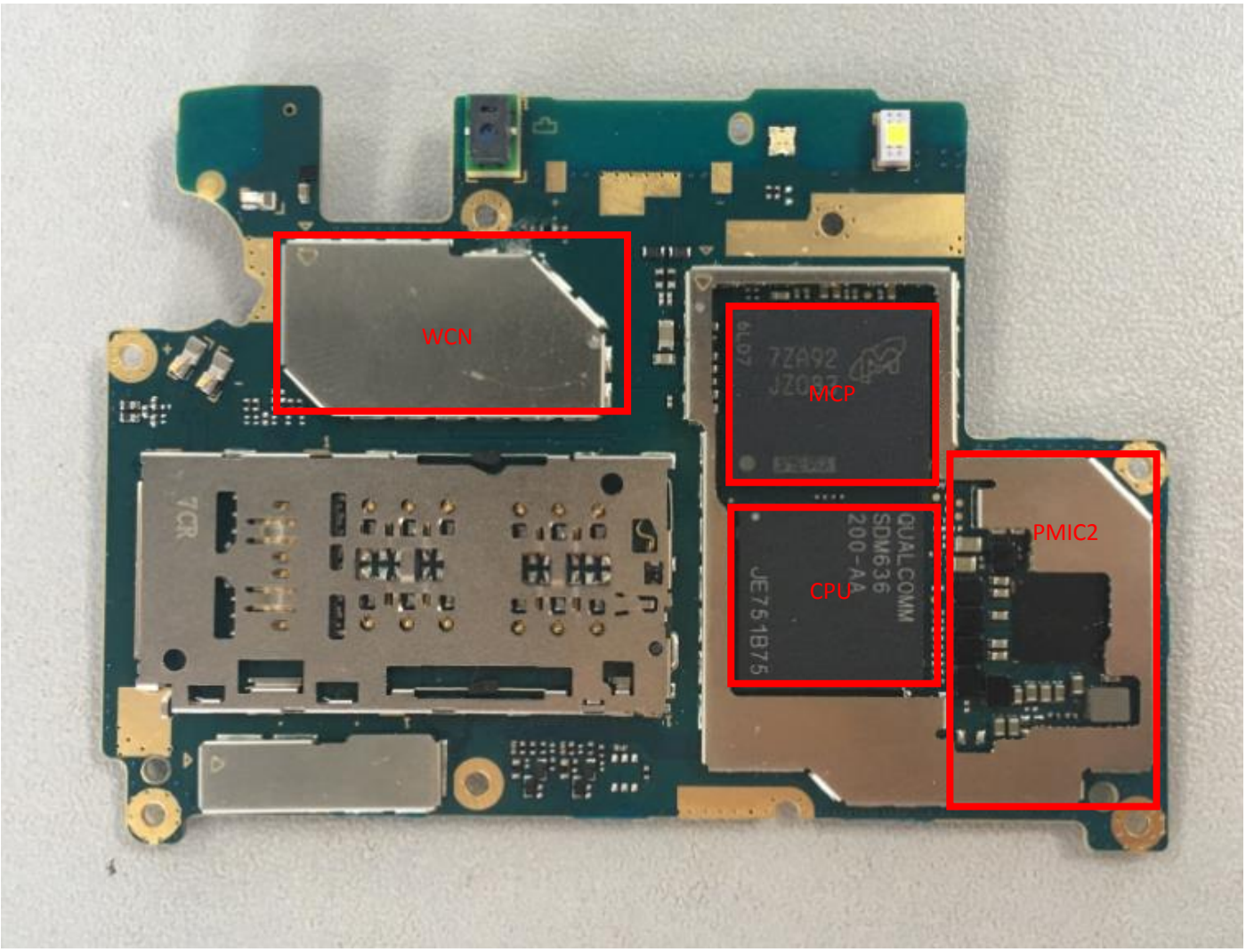

***Supported 2G/3G/4GBands for ZB601KL:**

GSM850/900/1800/1900 ， WCDMA850/900/2100

TDD-LTE B40, FDD-LTE B1/3/5/7/8/20

2.GSM(2G)/WCDMA(3G)/LTE(4G) RF

2.1 Circuit diagram

Product Spec	
Processor	Snapdragon™ 600 series processor and LTE modem, 64-bit, quad high-performance cores targeting 1.8048 GHz, ARM v-8
Modem	GSM/GPRS/EDGE; WCDMA/HSPA+/DC-HSPA+; TD-SCDMA; CDMA 2000; FDD-LTE; TD-LTE
Peak Data Rate	**636/660: DC-HSPA+ (DL/UL): 42/5.76 Mbps; LTE CAT4 : 150.8/51 Mbps**
RF Band Support	WW SKU: GSM 850/900/1800/1900 WCDMA 1/5/8 FDD 1/3/5/7/8/20 TDD 40

RF Main SET 2/3/4G:

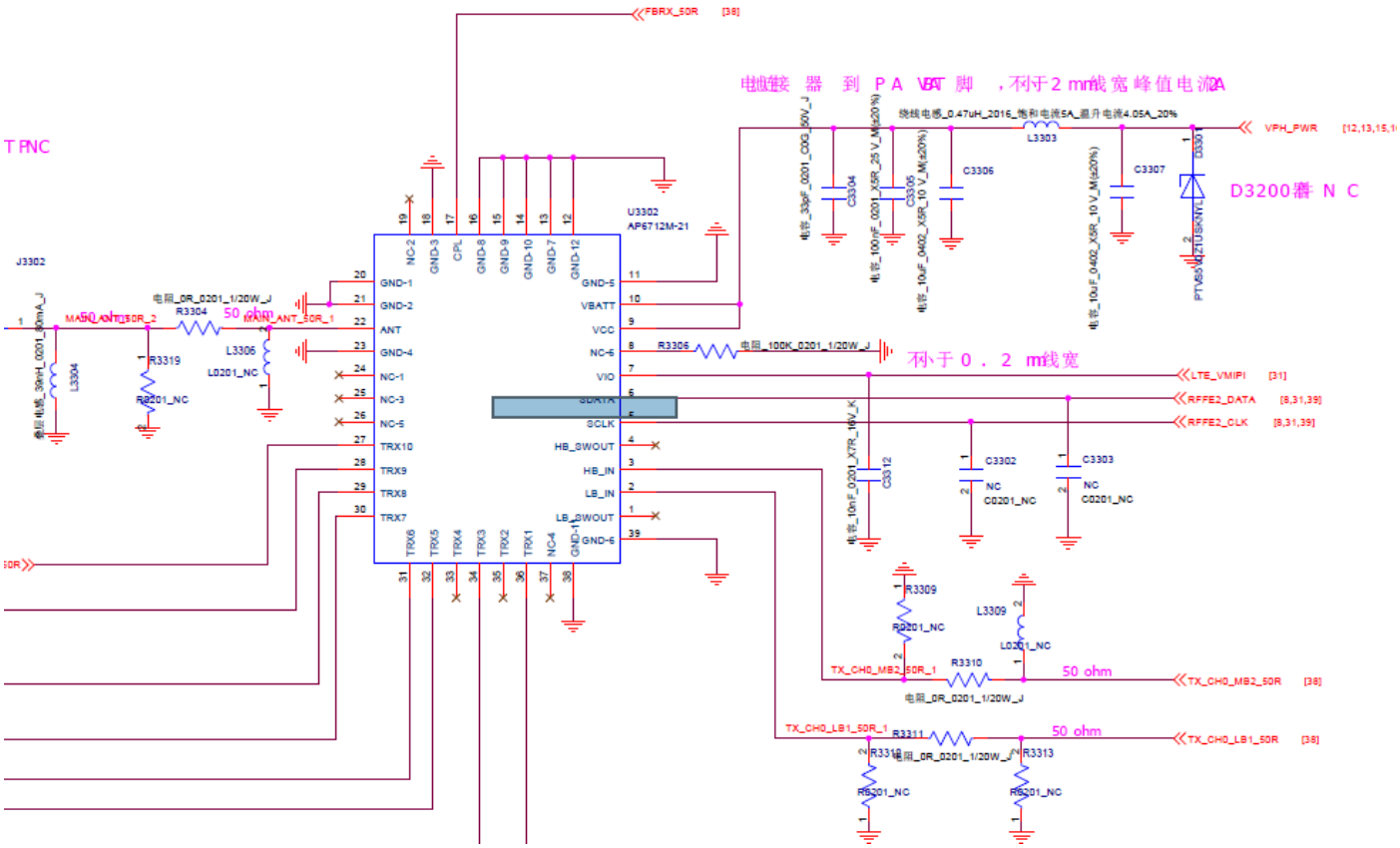

GSM:

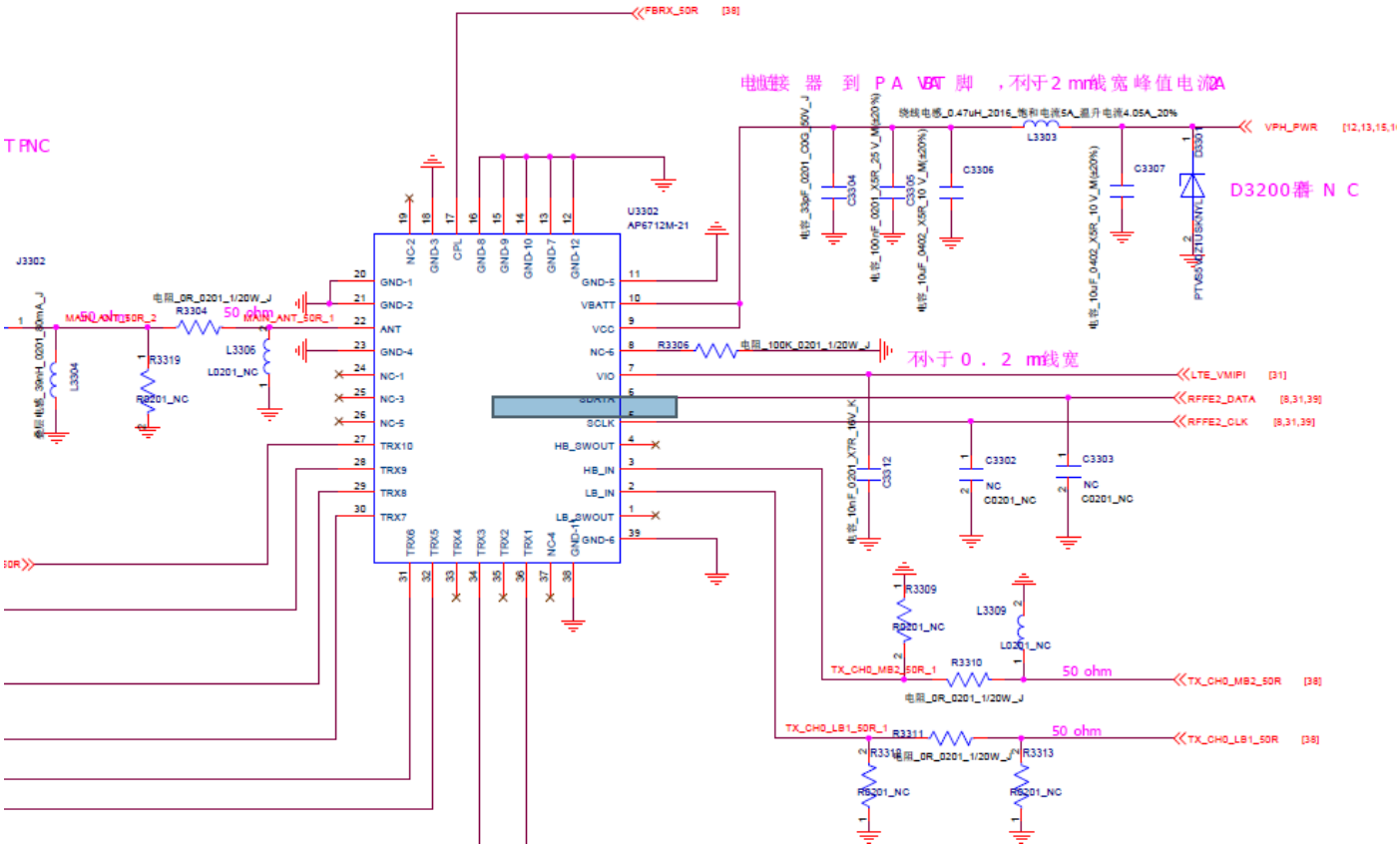
FBRX_50R [38]
电感接器到PA VBAT脚，不小于2mm线宽峰值电流2A
VPH_PWR
D3200器件NC
U3302
AP6712M-21
J3302
50 ohm
R3304
R3319
R3306
电阻_100K_0201_1/20W_J
不小于0.2mm线宽
LTE_VMIPI [31]
RFFE2_DATA [8,31,39]
RFFE2_CLK [8,31,39]
C3302
C3303
C3312
R3309
L3309
R3310
TX_CH0_MB2_50R_1
TX_CH0_MB2_50R [38]
TX_CH0_LB1_50R_1
TX_CH0_LB1_50R [38]
R3311
R3313
R0201_NC
L0201_NC
C0201_NC

WCDMA+LTE PA:

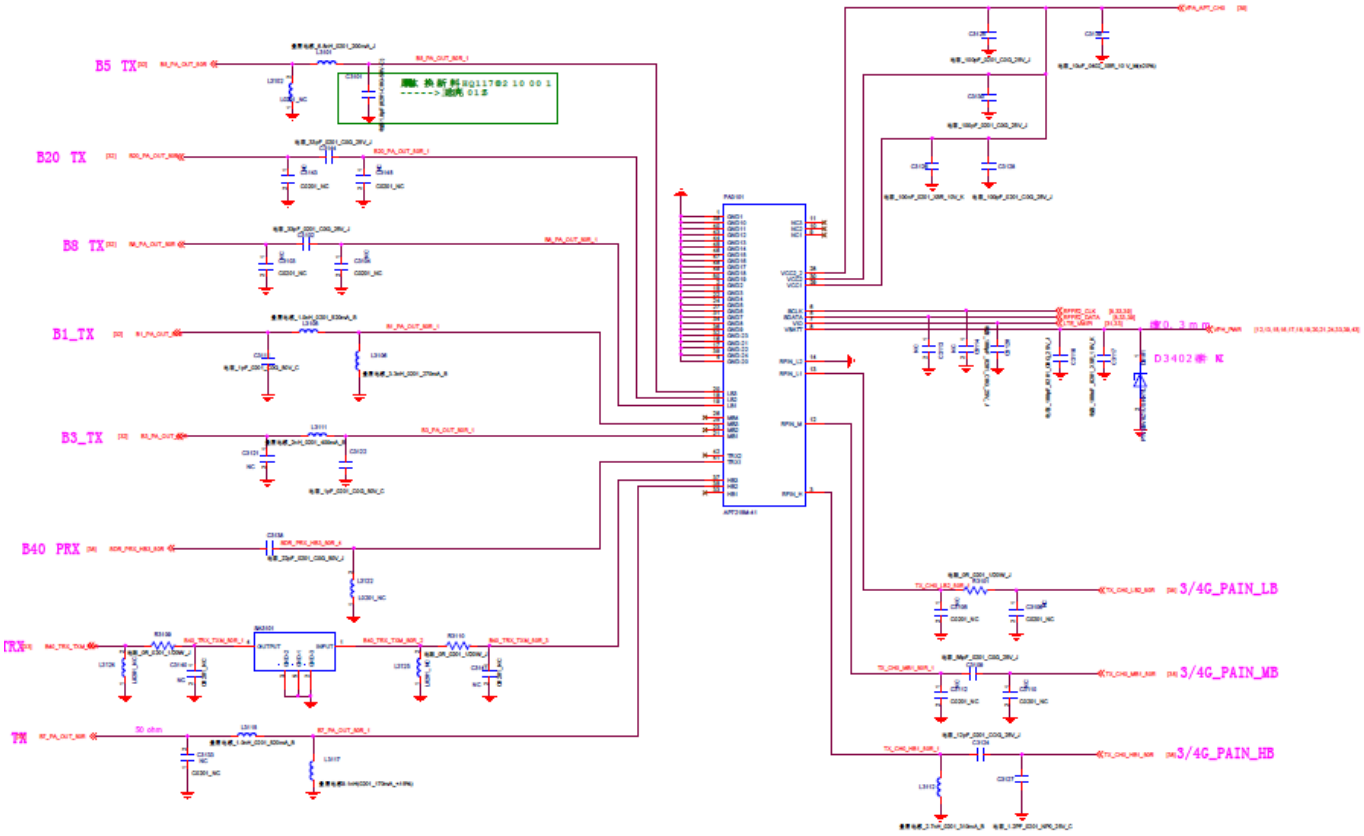
B5 TX
B20 TX
B8 TX
B1_TX
B3_TX
B40 PRX
TRX
TX
50 ohm
D3402器件NC
3/4G_PAIN_LB
3/4G_PAIN_MB
3/4G_PAIN_HB

B1 Duplexer:

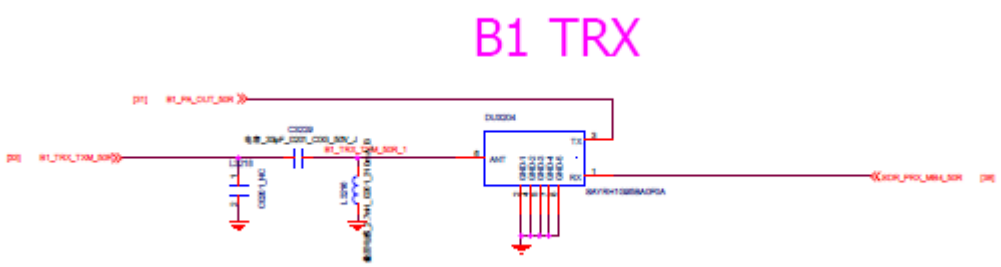

B2 Rx Saw:

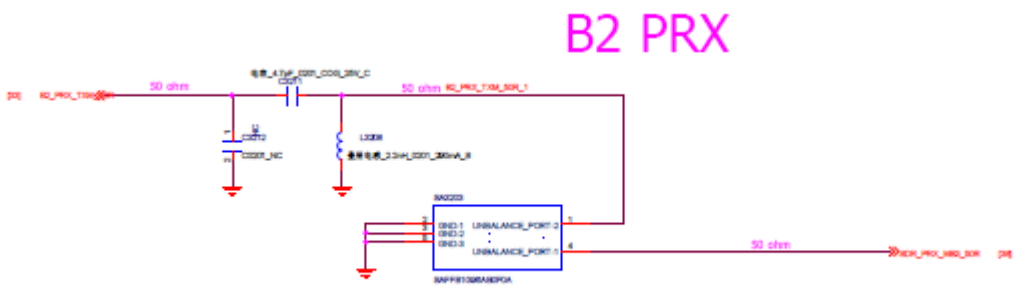

B3 Duplexer:

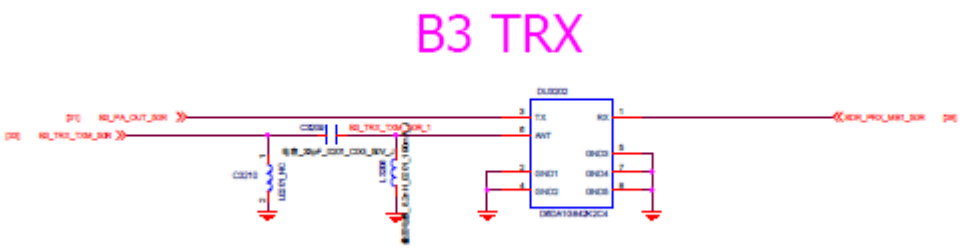

B5 Duplexer:

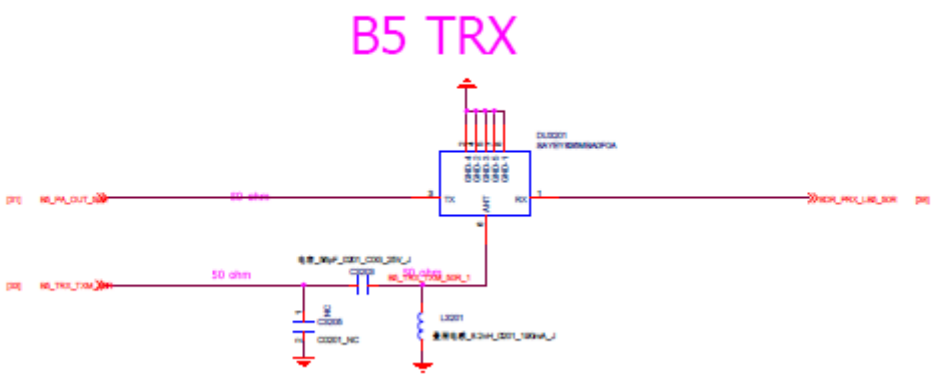

B7 Duplexer:

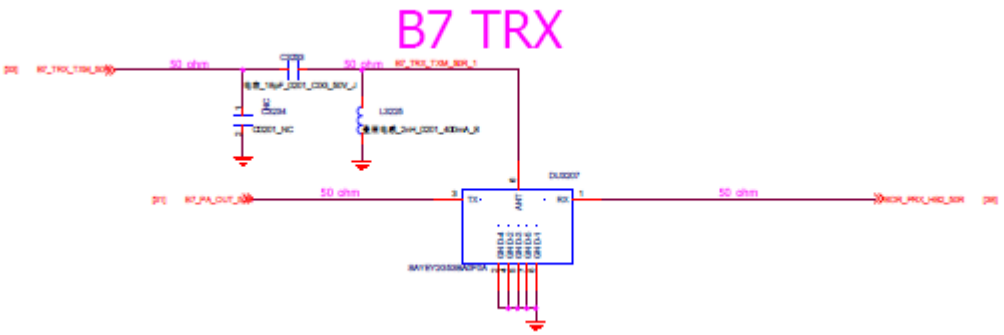

B8 Duplexer:

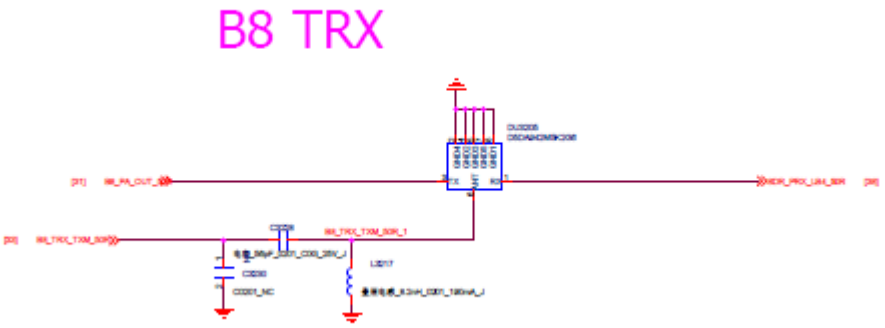

B20 Duplexer:

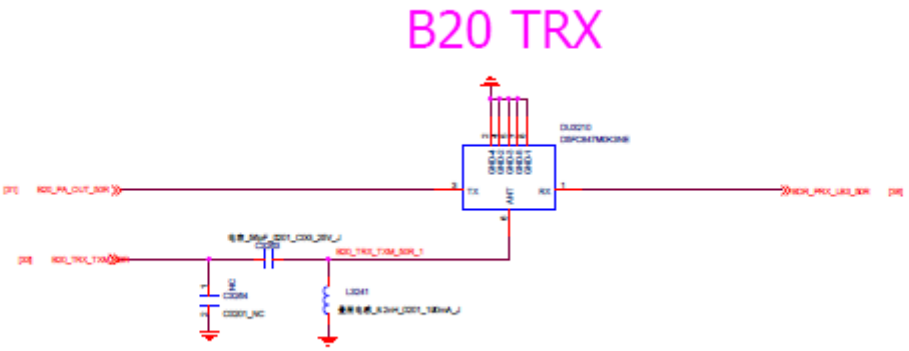

B40 SAW:

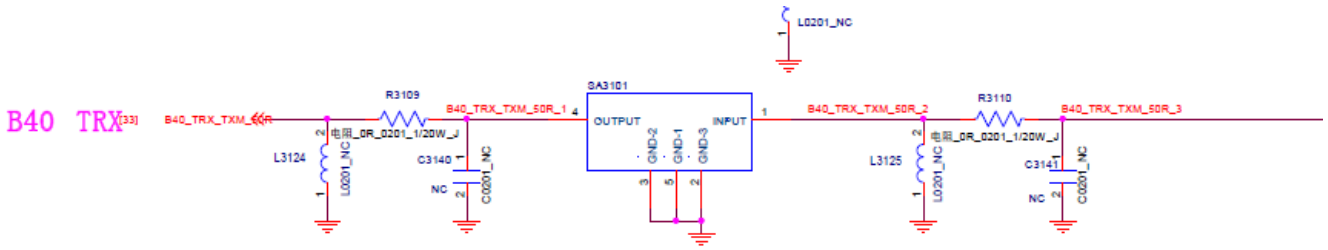

DRX RF SET:

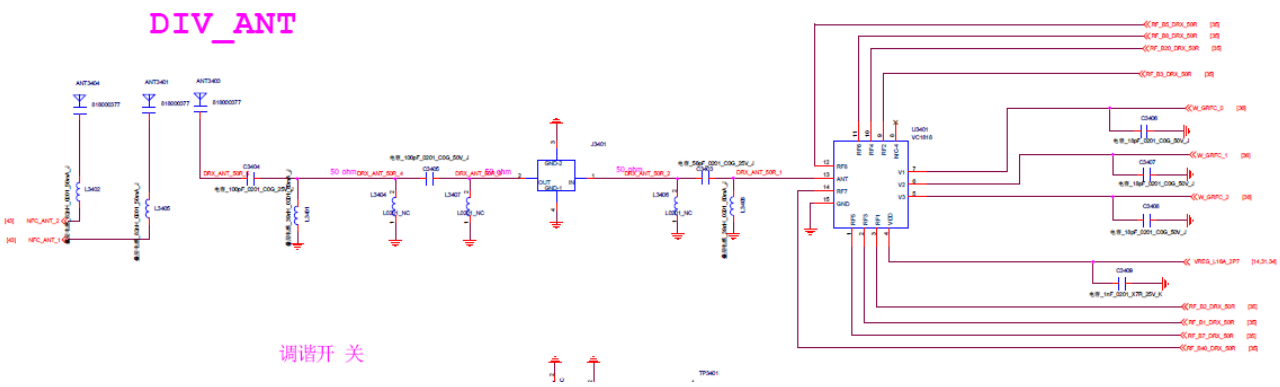

DFX RF Switch:

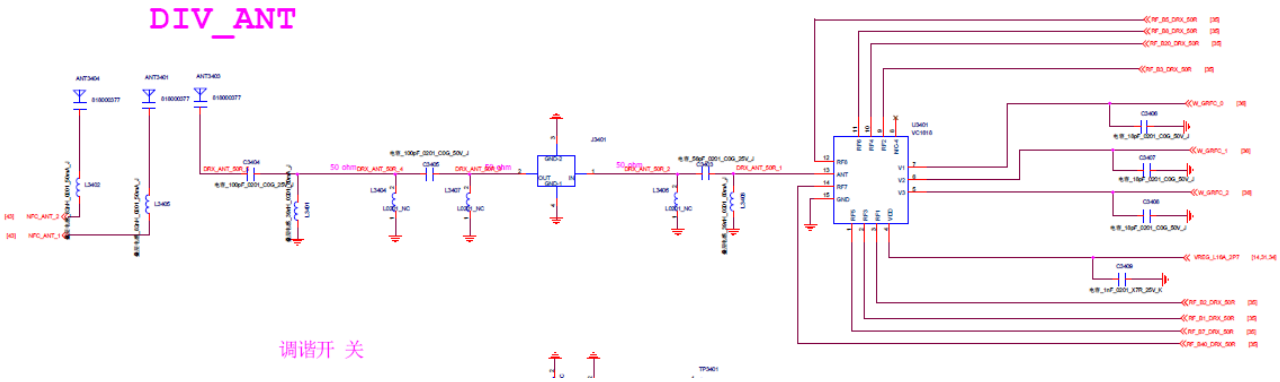

B1 DRX SAW:

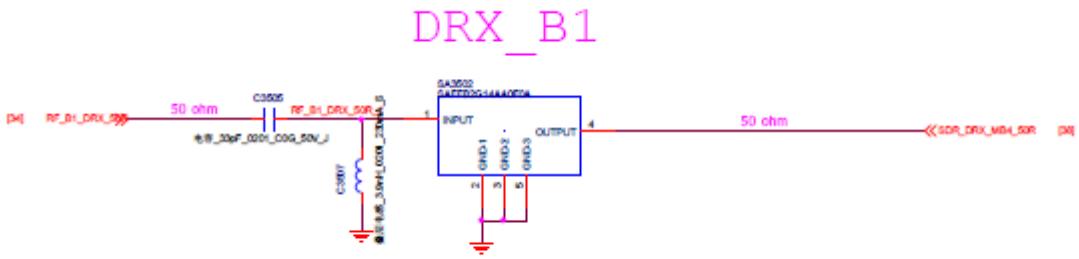

B2 DRX SAW:

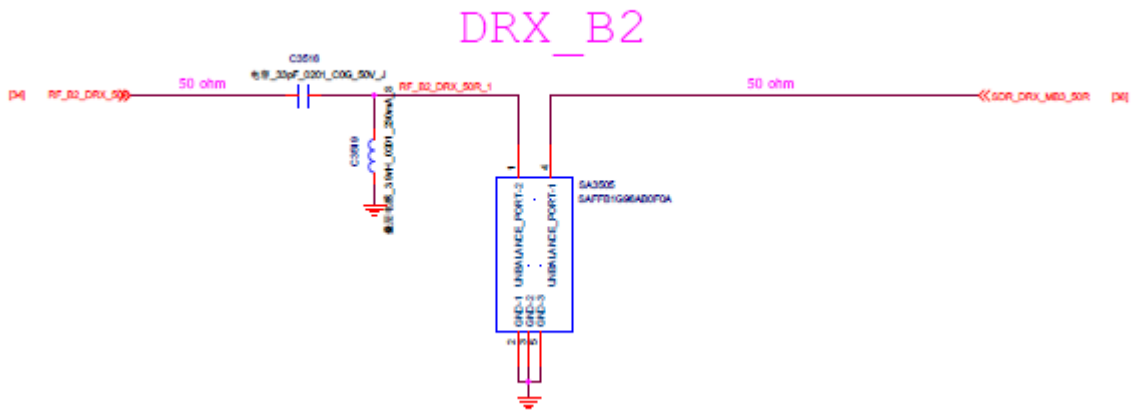

B3 DRX SAW:

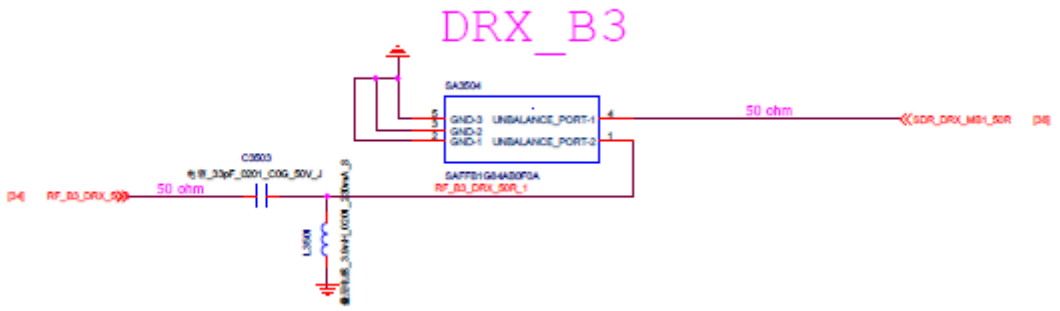

B5 DRX SAW:

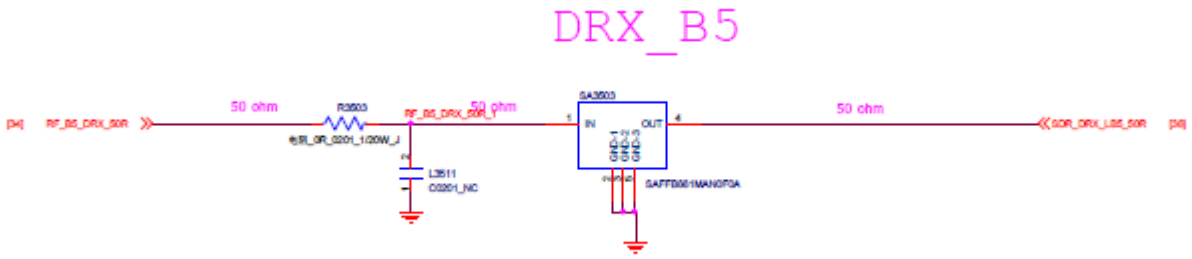

.

B7 DRX SAW:

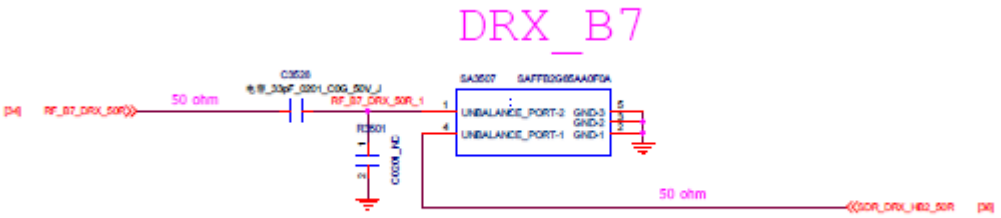

B8 DRX SAW:

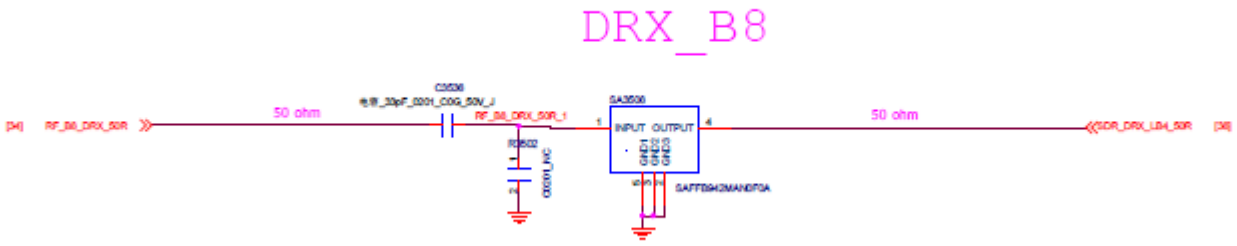

B20 DRX SAW:

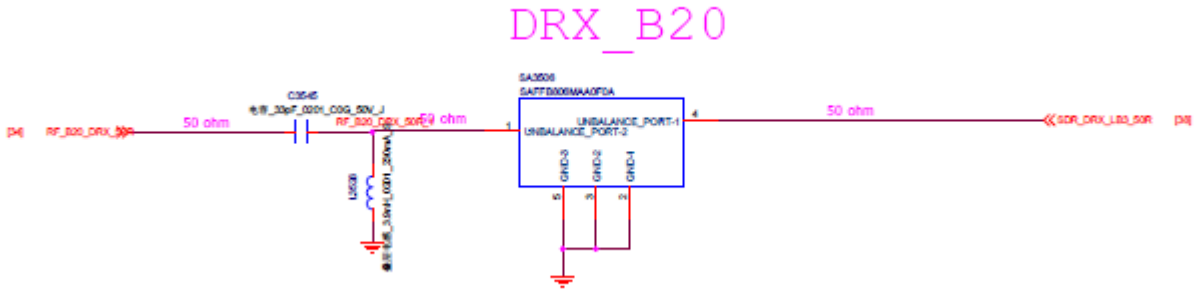

B40 DRX SAW

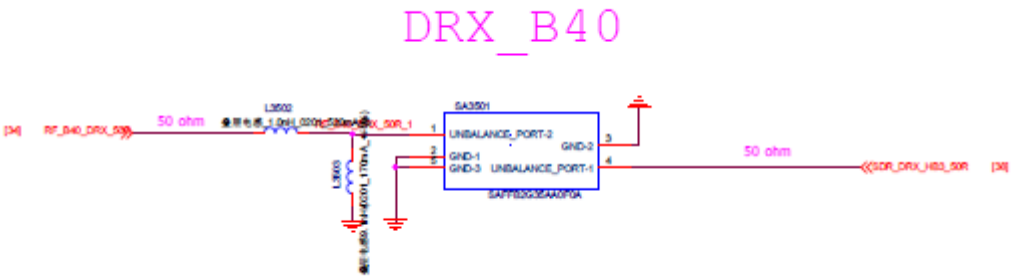

2.2RF Block Diagram:2G/3G/4G(GSM&WCDMA&LTE)System

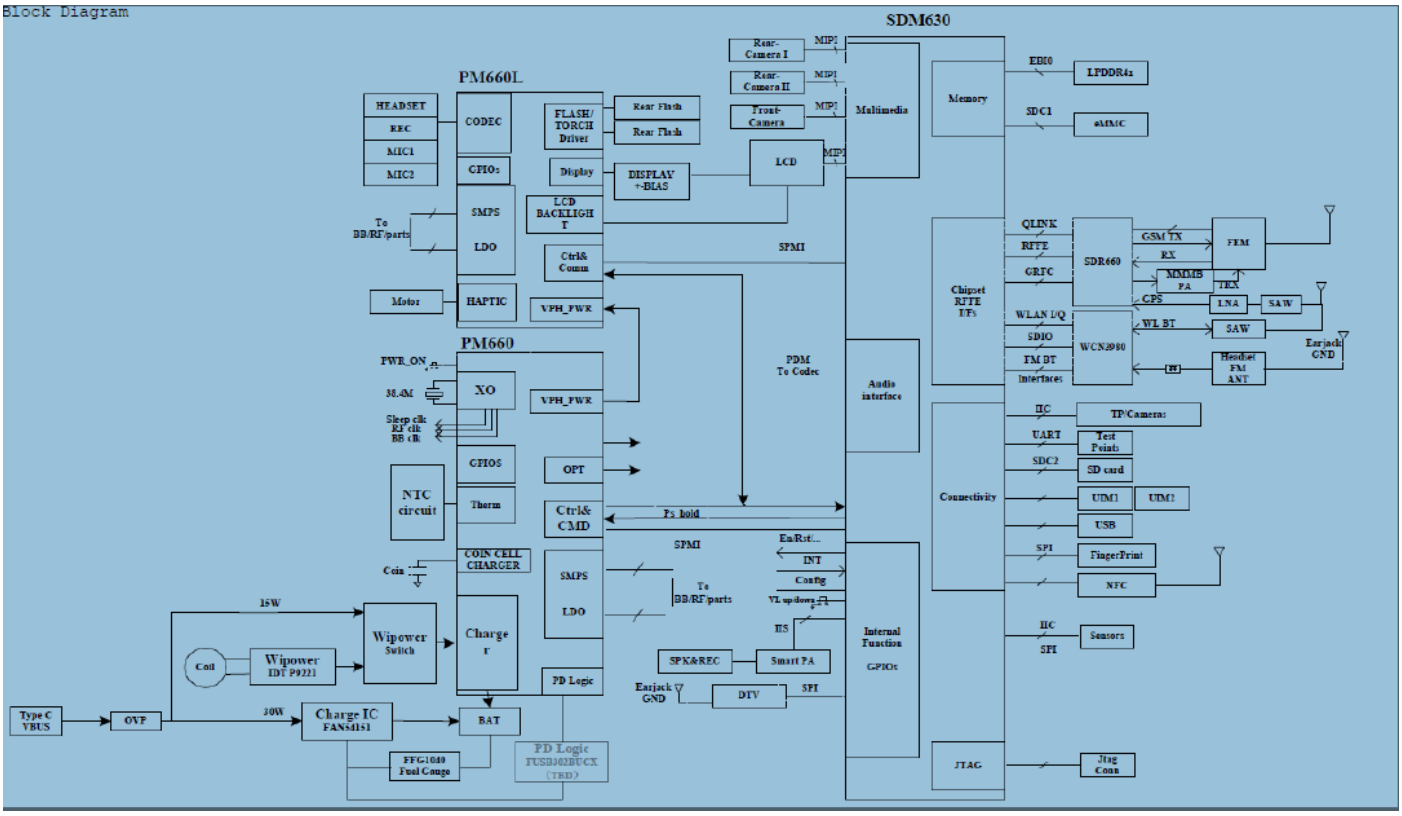

2.3 Key Components

编号	位号	物料描述
1	PA3101	PA
2	U3302	FEM
3	DU3204	B1 双工器_单端_1814,
4	SA3203	B2 SAW_单端_1109,
5	DU3201	B5 双工器_单端_1814,
6	DU3207	电磁干扰双向阻带滤波器_B7_单端
7	DU3205	电磁干扰双向阻带滤波器_Band8_单端
8	DU3210	B20 双工器_单端_1814,
9	DU3202	B3 双工器_单端_1814,
10	SA3101	声表面滤波器_B40_RX1109

11	U3401	分级开关_VC1618
12	U3403	天线开关_AW9304
13	SA3502	B1 DRX_1109
14	SA3505	GSM1900/RX_SAW_1109
15	SA3504	B3 DRX_1109
16	SA3503	B5/B26/B18/B19_DRX_1109_单端,
17	SA3507	B7_DRX_1109
18	SA3508	声表面滤波器_B8_RX
19	SA3506	B20_DRX_1109_单端,
20	SA3501	声表面滤波器_B40_RX

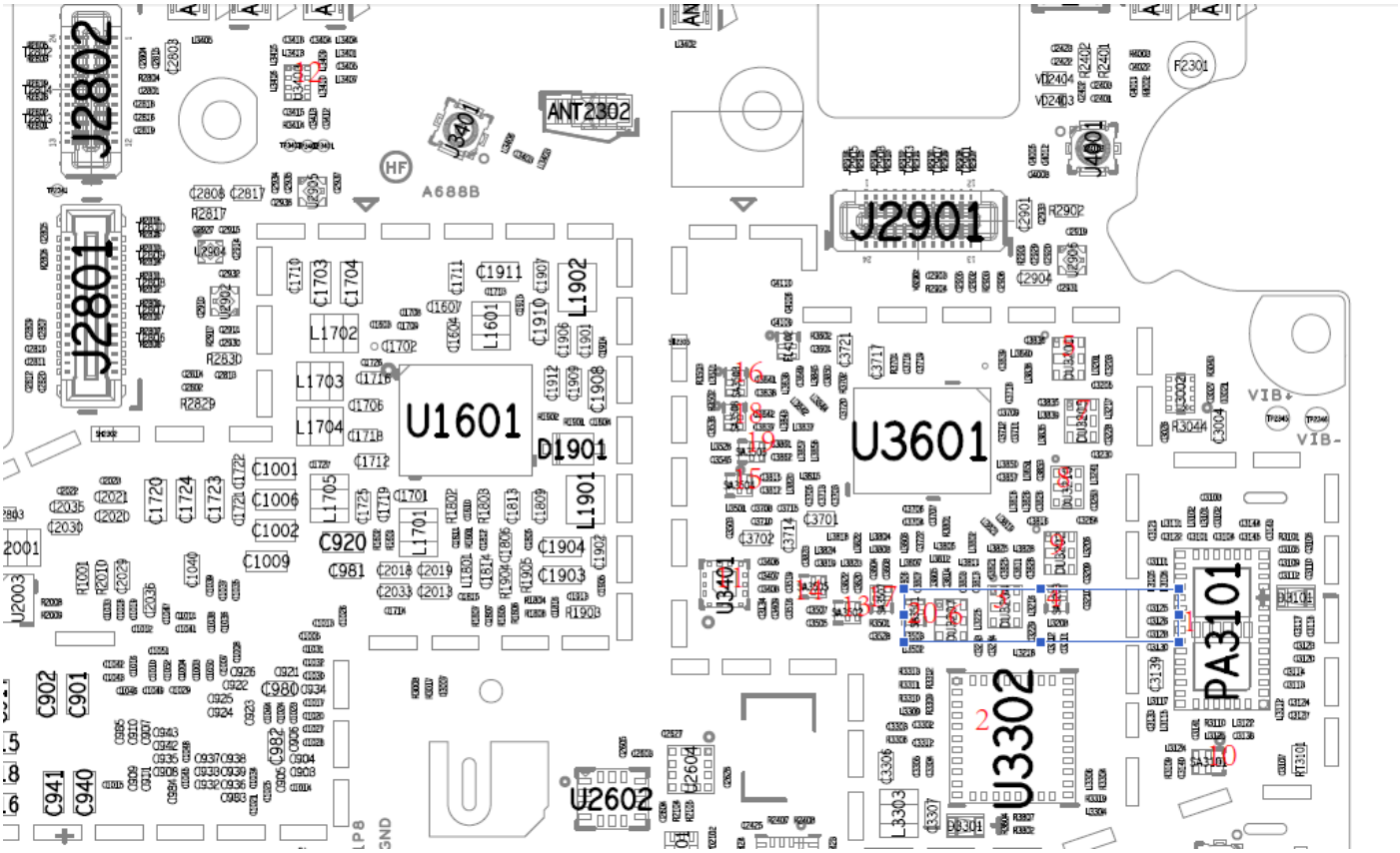

3.WIFI/GPS/BT

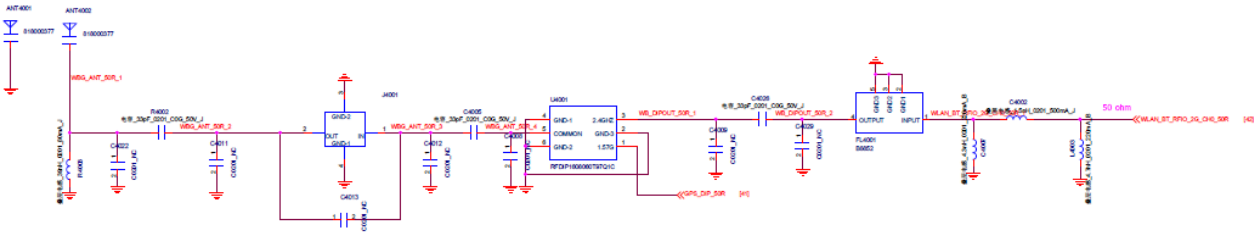

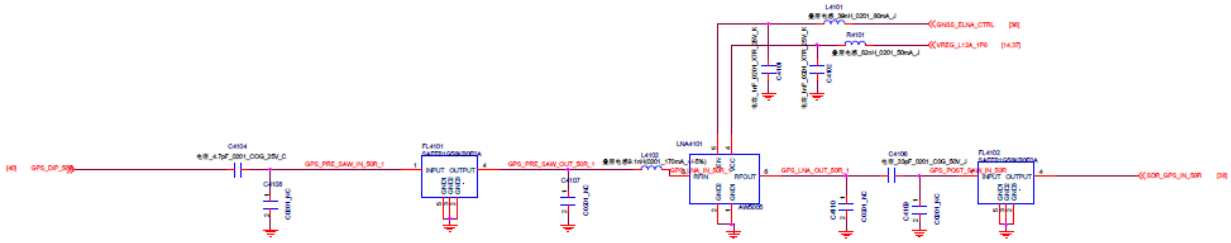

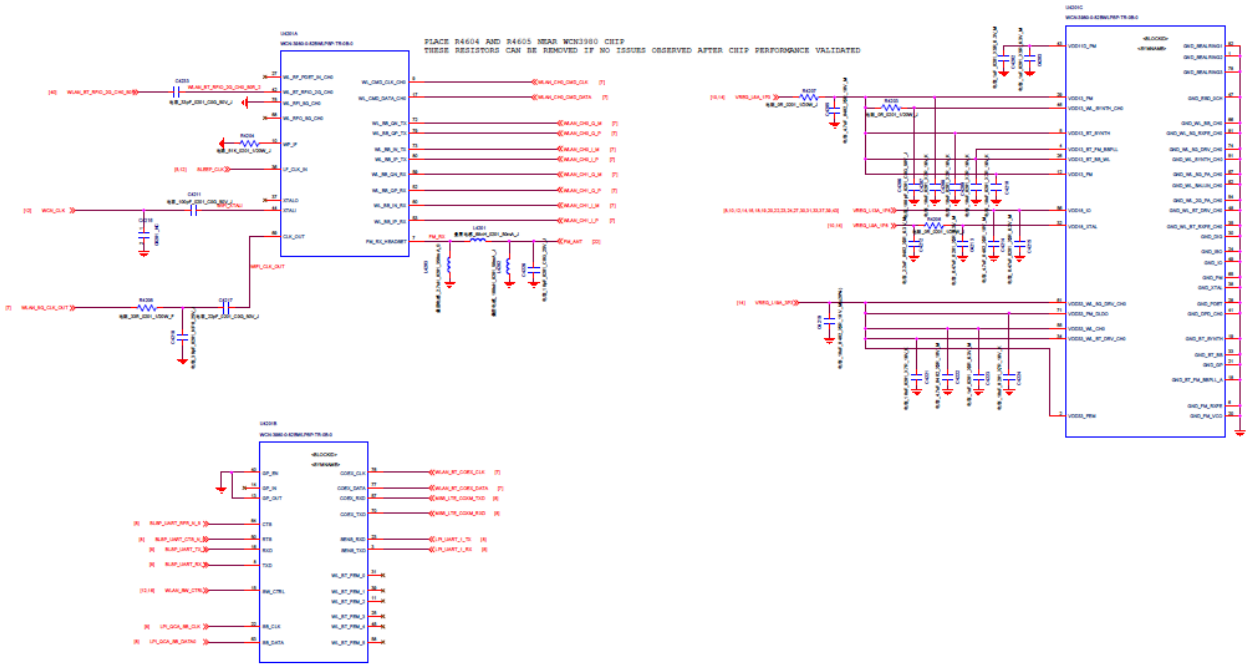
PLACE R4604 AND R4605 NEAR WCN3980 CHIP
THESE RESISTORS CAN BE REMOVED IF NO ISSUES OBSERVED AFTER CHIP PERFORMANCE VALIDATED

3.2 RF Block Diagram :WIFI/GPS/BT System

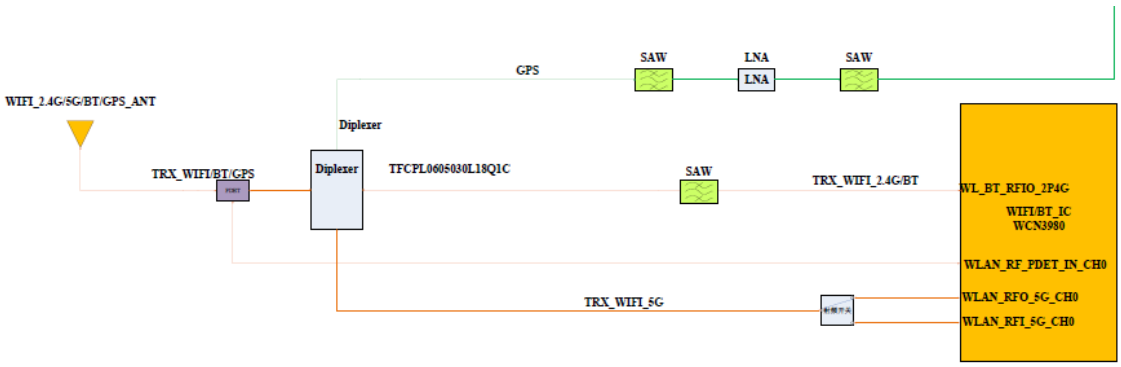

3.3Key Components
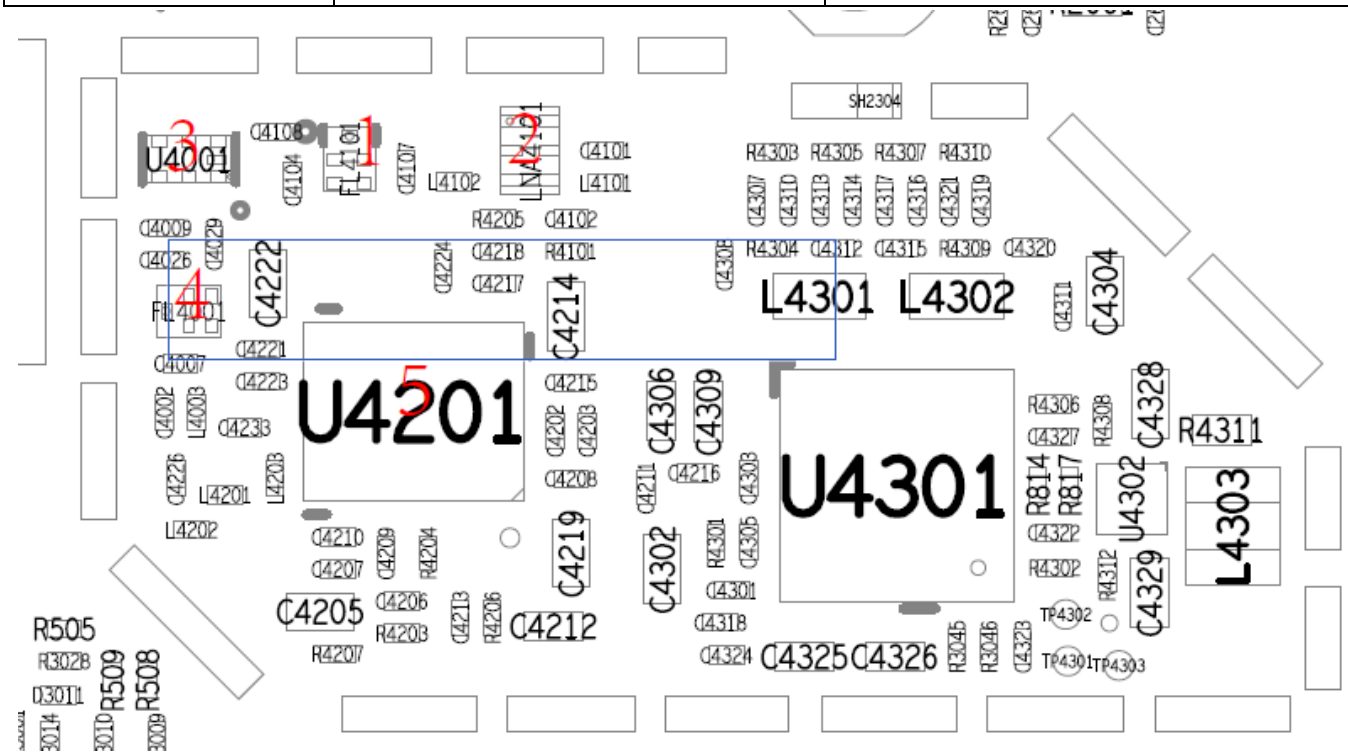
1	FL4101	SAW_GPS BEIDOU_RX1109
2	LNA4101	射频 LNA_1575MHz(GPS)
3	U4001	电磁干扰双向阻带滤波器 _1.575GHz/2.4GHz/5GHz_Triplexer
4	FL4001	LPF_2402.5-2481.5MHz_1109
5	U4201	WCN IC